AX0P2–01

DISASSEMBLY

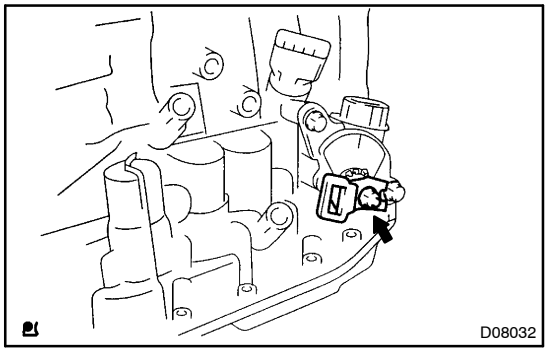

1. REMOVE PARK/NEUTRAL POSITION SWITCH

(a) Remove the nut, washer and control shaft lever.

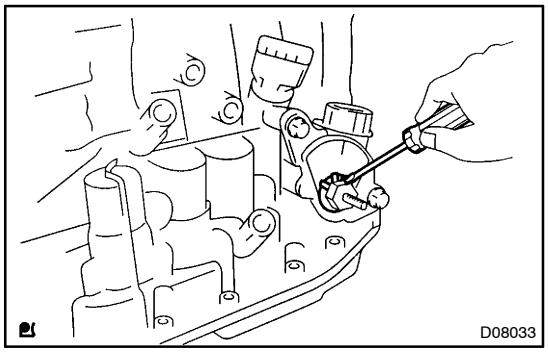

(b) Using a screwdriver, untake the lock washer.

(c) Remove the nut.

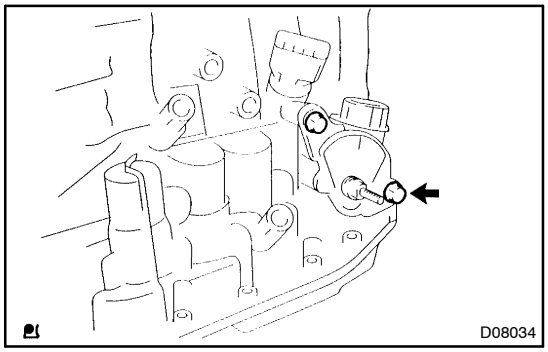

(d) Remove the 2 bolts, and pull out the park/neutral position switch.

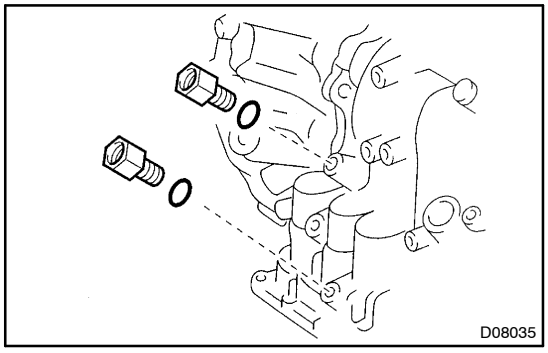

2. REMOVE UNION

(a) Remove the 2 unions.

(b) Remove the 2 O–rings from the 2 union.

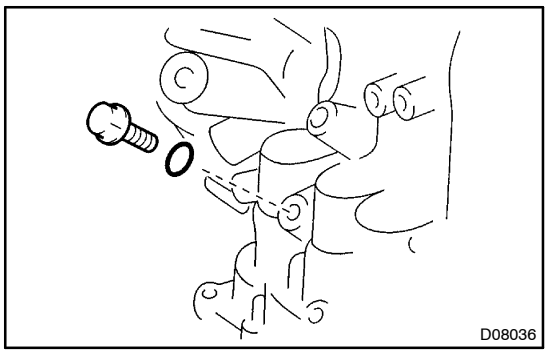

3. REMOVE TRANSAXLE CASE PLUG NO. 1

(a) Remove the transaxle case plug No. 1 from the transaxle case.

(b) Remove the O–ring from the transaxle case plug No. 1.

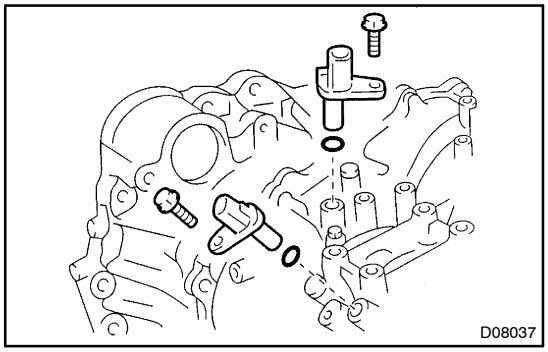

4. REMOVE SPEED SENSOR

(a) Remove the 2 bolts and 2 speed sensors from the transaxle.

(b) Remove the 2 O–rings from the sensors.

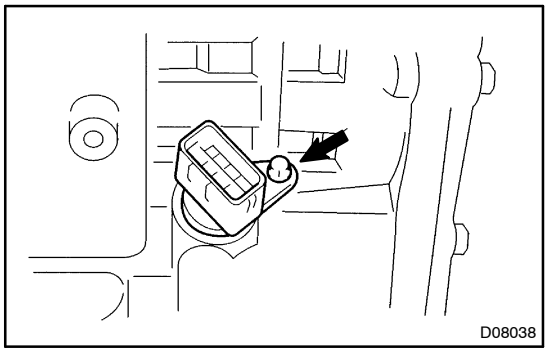

5. REMOVE SOLENOID WIRE RETAINING BOLT

NOTICE:

Remove the bolt only and do not remove the solenoid wire.

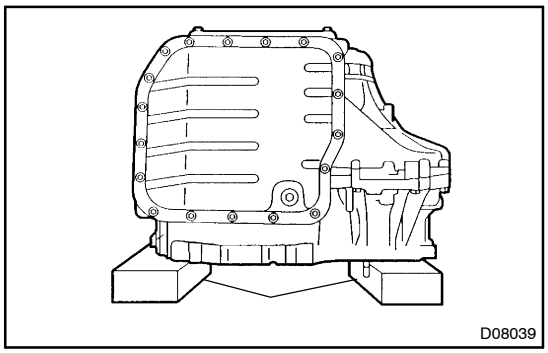

6. PLACE TRANSAXLE ON WOODEN BLOCKS

NOTICE:

Be careful not to damage the oil seal.

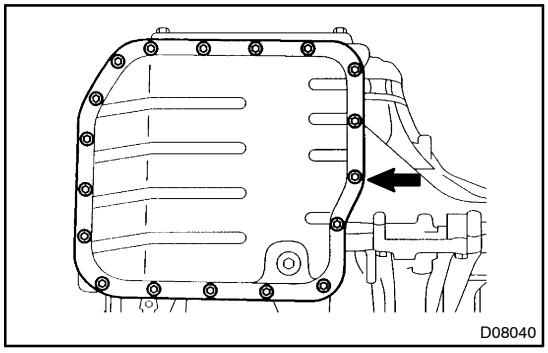

7. REMOVE OIL PAN AND GASKET

(a) Remove the 18 bolts.

(b) Remove the oil pan and gasket.

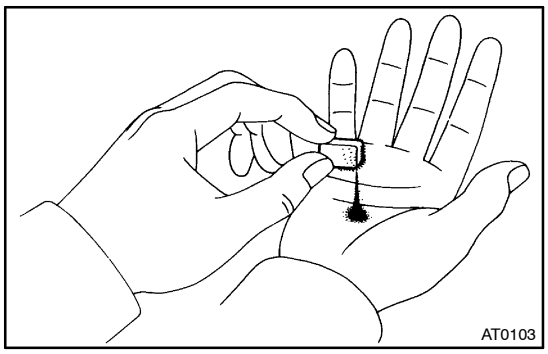

8. EXAMINE PARTICLES IN PAN

Remove the magnets and use them to collect any steel chips. Examine the chips and particles in the pan and on the magnet to determine what type of wear has occurred in the transaxle:

Steel (magnetic)..... bearing, gear and plate wear

Brass (non–magnetic)..... bushing wear

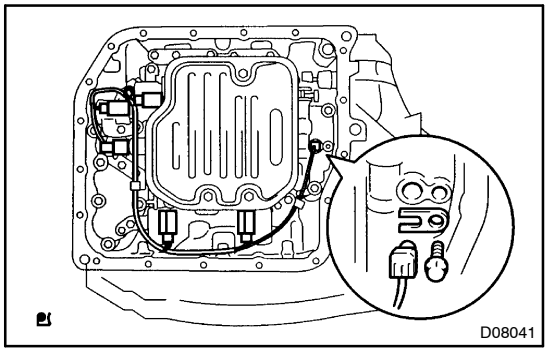

9. REMOVE TRANSAXLE SOLENOID WIRE

(a) Remove the 5 connectors from shift solenoid valves.

(b) Remove the bolt, lock plate and ATF temperature sensor.

(c) Remove the transaxle solenoid wire from the transaxle case.

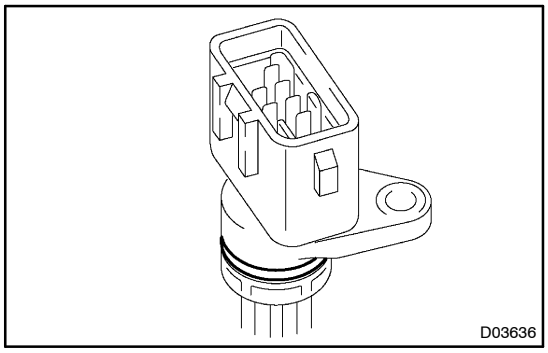

(d) Remove the O–ring from the transaxle solenoid wire.

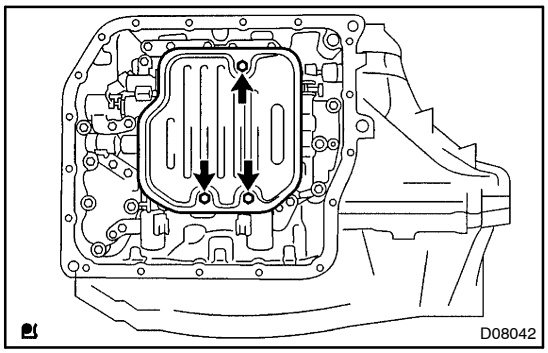

10. REMOVE OIL STRAINER

(a) Remove the 3 bolts and oil strainer.

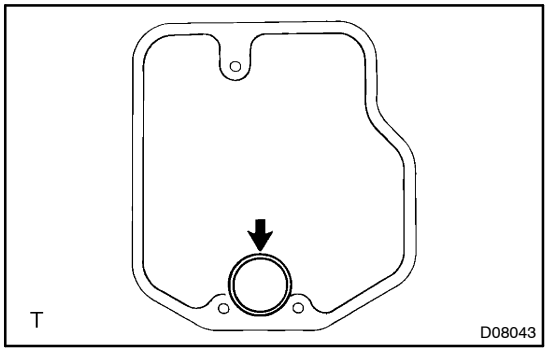

(b) Remove the gasket from the oil strainer.

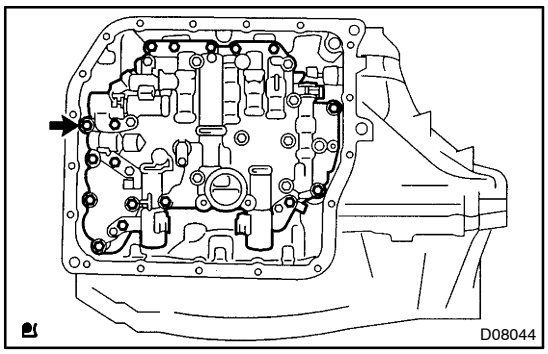

11. REMOVE VALVE BODY ASSEMBLY

Support the valve body assembly and remove the 17 bolts and the valve body assembly.

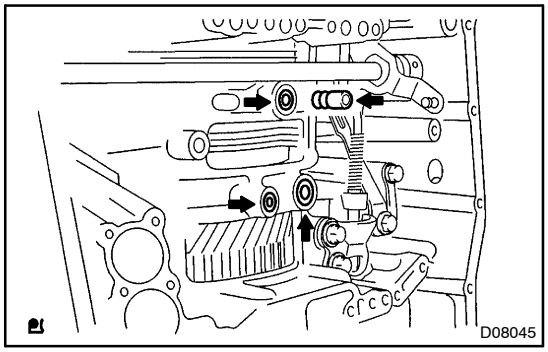

12. REMOVE 4 APPLY GASKETS

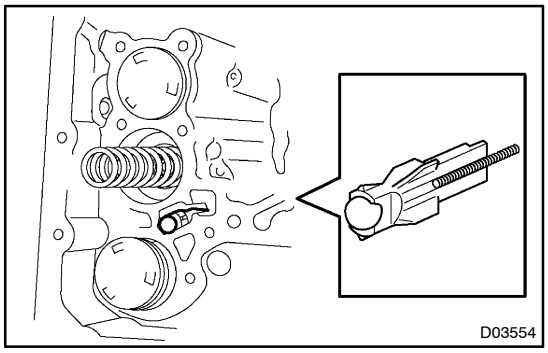

13. REMOVE CHECK BALL BODY

Remove the check ball body and spring.

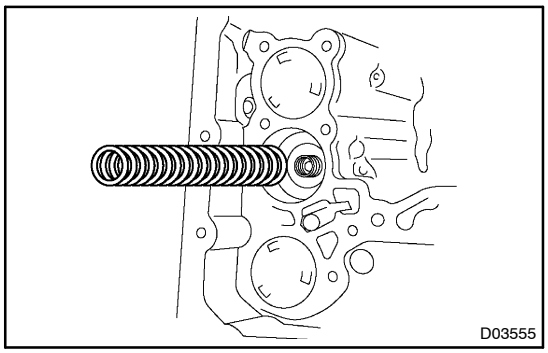

14. REMOVE ACCUMULATOR SPRING AND PISTON

(a) Remove the spring from the C_3 accumulator piston.

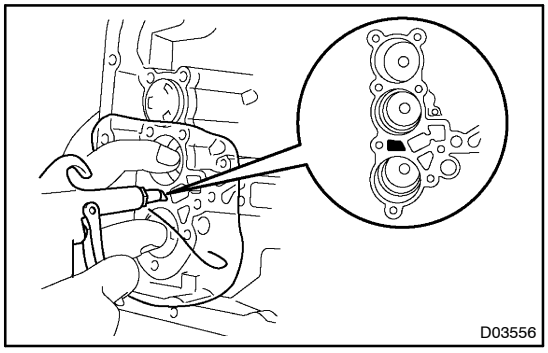

(b) Apply compressed air (392 kPa, 4.0 kgf/cm^2, 57 psi) to the oil hole and remove the C_3 accumulator piston.

NOTICE:

- **Blowing off the air may cause the piston's jump–out. When removing the piston, hold it with your hand using a waste cloth.**
- **Take care not to splash ATF when air–blowing.**

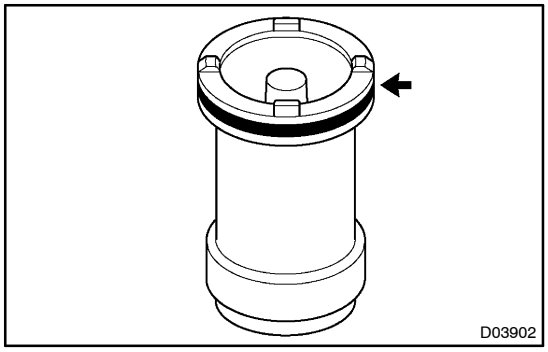

(c) Remove the O–ring from the piston.

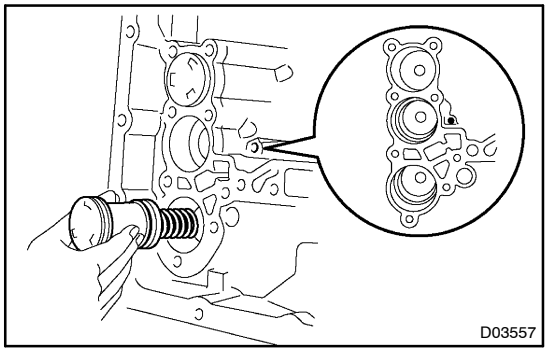

(d) Apply compressed air (392 kPa, 4.0 kgf/cm^2, 57 psi) to the oil hole and remove the C_1 accumulator piston and spring.

NOTICE:

- **Blowing off the air may cause the piston's jump–out. When removing the piston, hold it with your hand using a waste cloth.**
- **Take care not to splash ATF when air–blowing.**

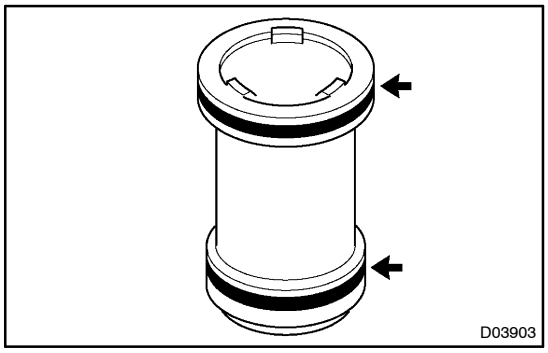

(e) Remove the 2 O–rings from the piston.

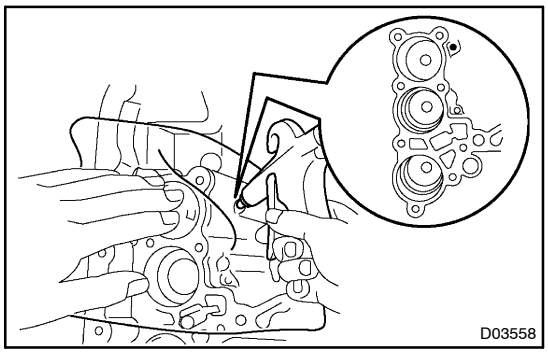

(f) Apply compressed air (392 kPa, 4.0 kgf/cm^2, 57 psi) to the oil hole and remove the B_3 accumulator piston and 2 springs.

NOTICE:

- **Blowing off the air may cause the piston's jump–out. When removing the piston, hold it with your hand using a waste cloth.**
- **Take care not to splash ATF when air–blowing.**

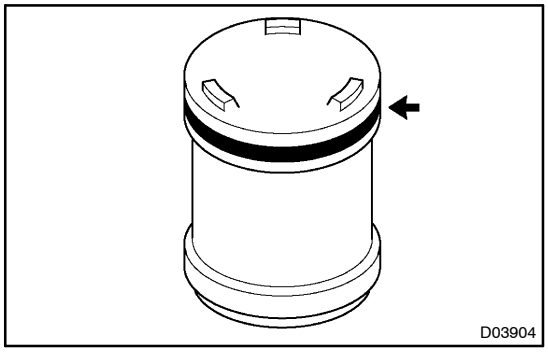

(g) Remove the O–ring from the piston.

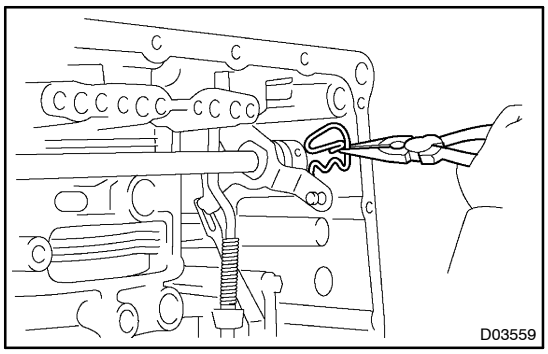

15. REMOVE MANUAL VALVE LEVER SHAFT

(a) Using needle–nose pliers, remove the retainer spring.

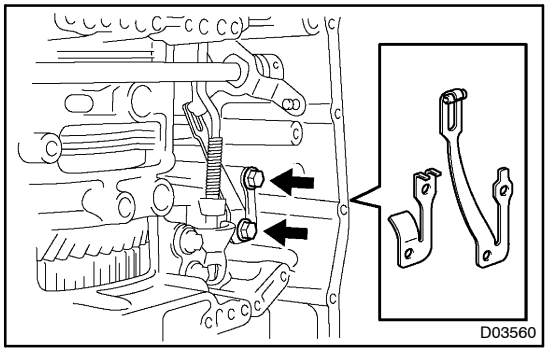

(b) Remove the 2 bolts, the manual detent spring and cover.

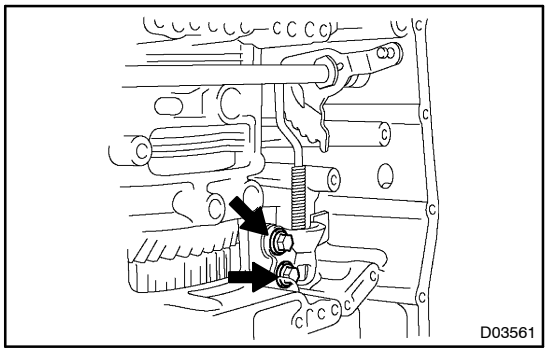

(c) Remove the 2 bolts and the parking lock pawl bracket.

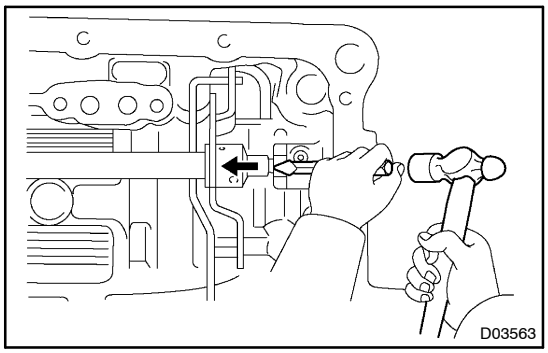

(d) Using a chisel and a hammer, unstake and remove the spacer.

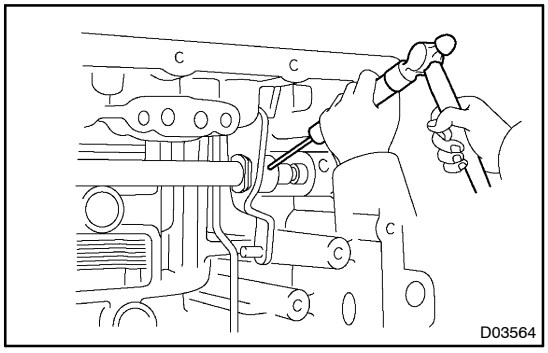

(e) Using a pin punch and a hammer, drive out the pin.
HINT:
Slowly drive out the pin so that it will not fall into the transaxle case.

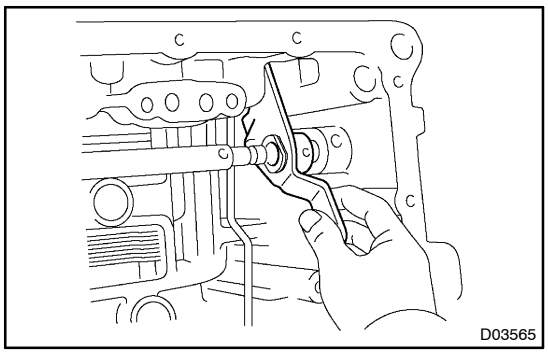

(f) Remove the manual valve lever shaft and the manual valve lever.

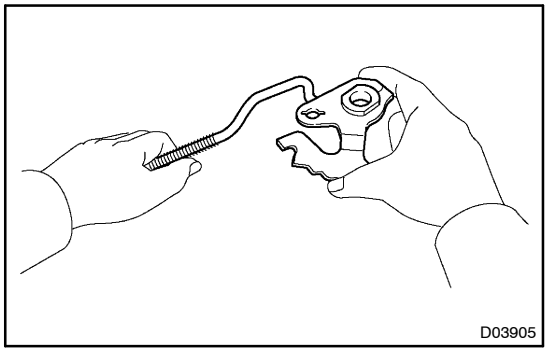

(g) Remove the parking lock rod from the manual valve lever shaft.

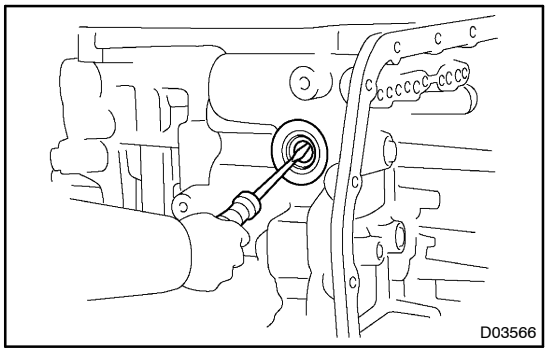

(h) Using a screwdriver, remove the oil seal.

16. PLACE TRANSAXLE CASE

Fix the transaxle case with the oil pump side facing up.

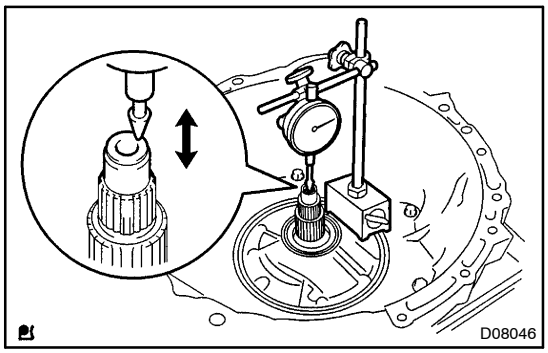

17. INSPECT INPUT SHAFT END PLAY

Using a dial indicator, measure the input shaft end play.

End play: 0.27 – 1.24 mm (0.0106 – 0.0488 in.)

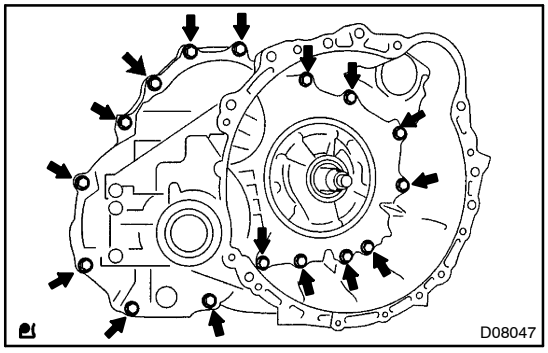

18. REMOVE TRANSAXLE HOUSING

(a) Remove the 16 bolts.

(b) Tap on the circumference of the transaxle housing with a plastic hammer to remove the transaxle housing from the transaxle case.

NOTICE:

Differential may be accidentally removed when the transaxle housing is removed.

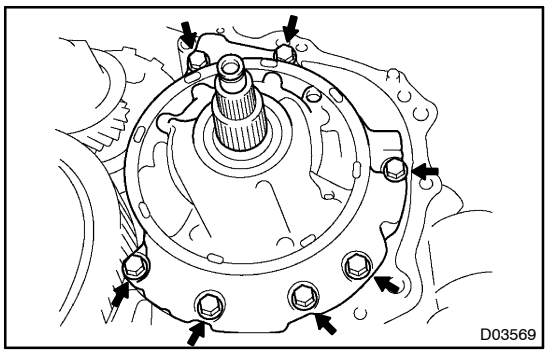

19. REMOVE OIL PUMP

(a) Remove the 7 bolts and the oil pump.

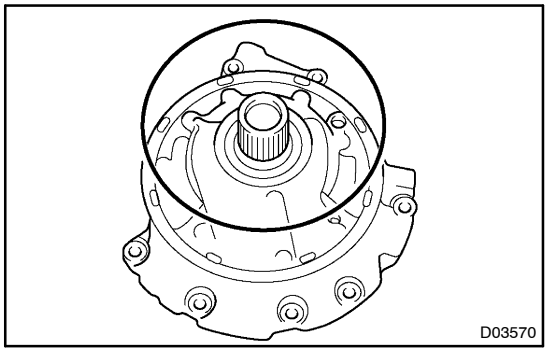

(b) Remove the O–ring from the oil pump.

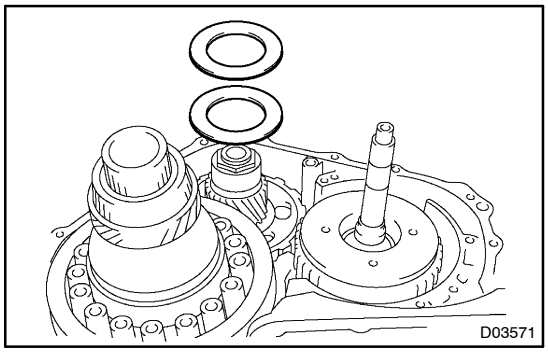

20. REMOVE THRUST BEARING AND BEARING RACE

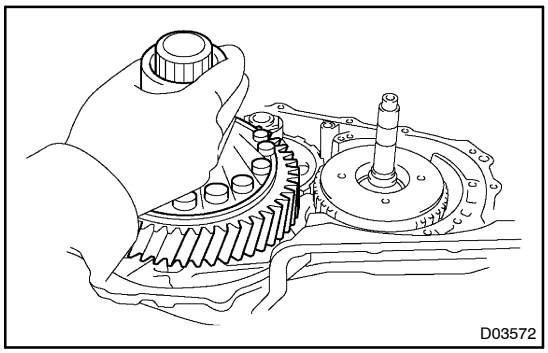

21. REMOVE DIFFERENTIAL ASSEMBLY

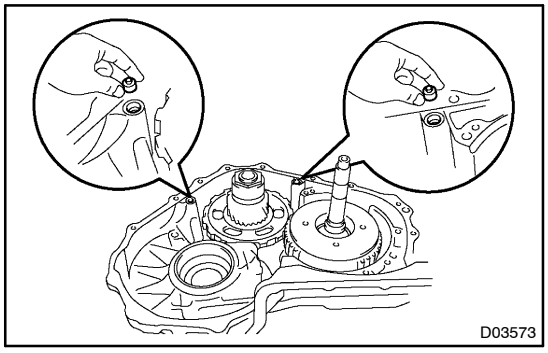

22. REMOVE 2 APPLY GASKETS

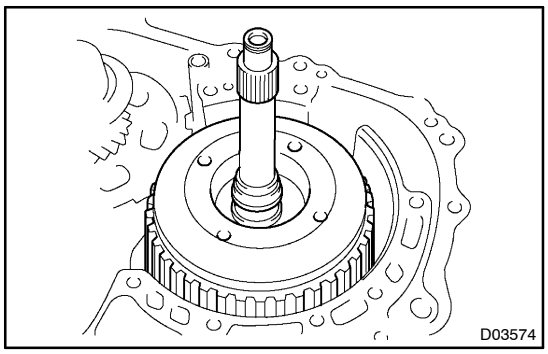

23. REMOVE FORWARD CLUTCH

(a) Remove the forward clutch from the transaxle case.

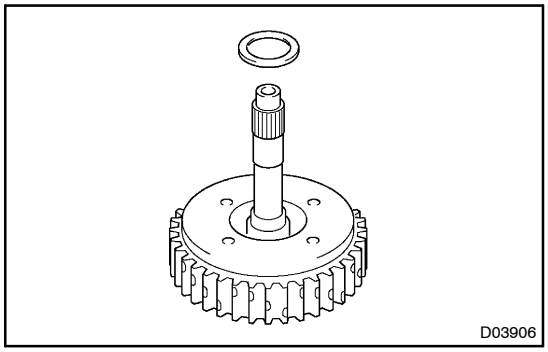

(b) Remove the thrust bearing from the forward clutch.

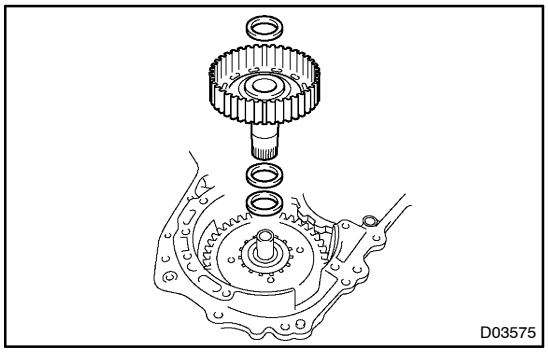

(c) Remove the multiple clutch hub, 2 thrust bearing and bearing race from the transaxle case.

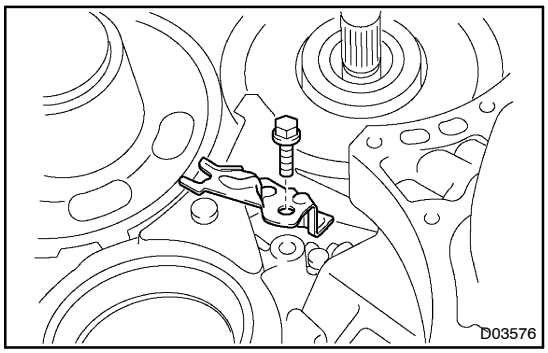

24. REMOVE U/D PLANETARY GEAR ASSEMBLY

(a) Remove a bolt and the pawl shaft clamp.

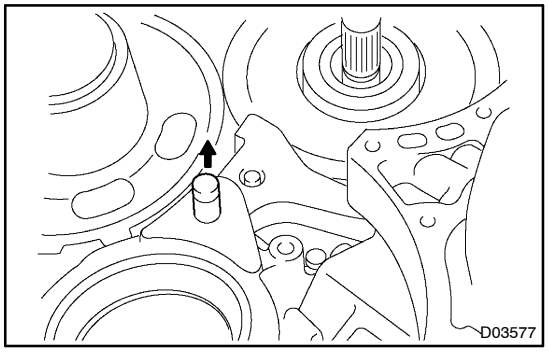

(b) Remove the parking lock pawl shaft.

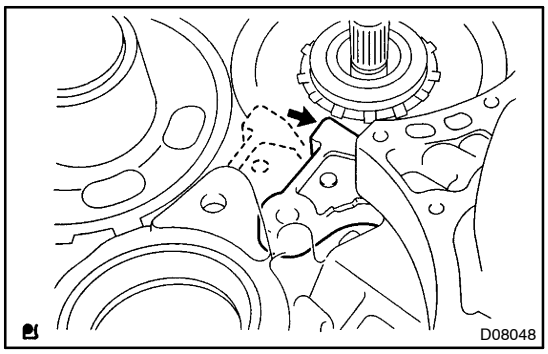

(c) Push the parking lock pawl.

HINT:

Failure to do so will cause interference when the U/D planetary gear is removed.

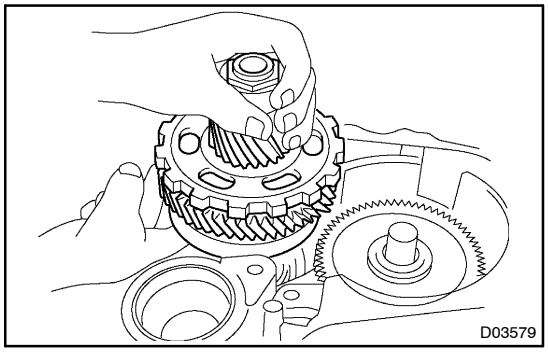

(d) Remove the U/D planetary gear assembly from the transaxle case.

NOTICE:

Be careful that the U/D planetary gear assembly do not fall out.

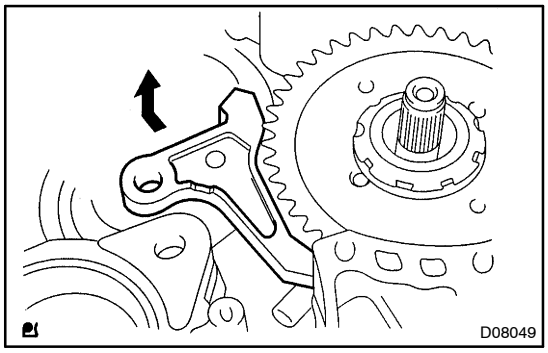

(e) Remove the spring, the pawl pin and the parking lock pawl.

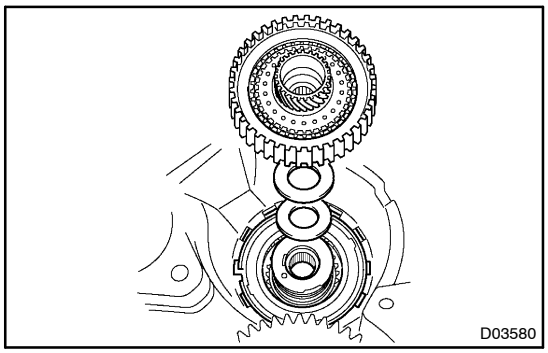

25. REMOVE U/D CLUTCH ASSEMBLY

Remove the U/D clutch assembly, the thrust bearing and the bearing race from the transaxle case.

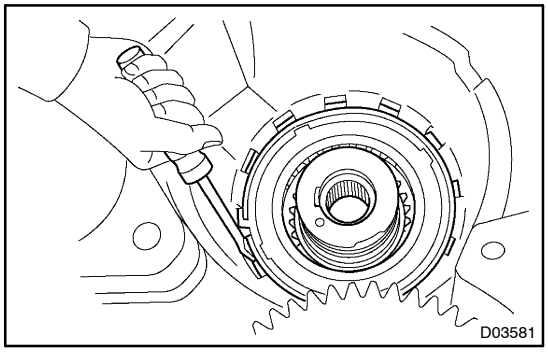

26. REMOVE ONE–WAY CLUTCH NO. 2

(a) Using a screwdriver, remove the snap ring.

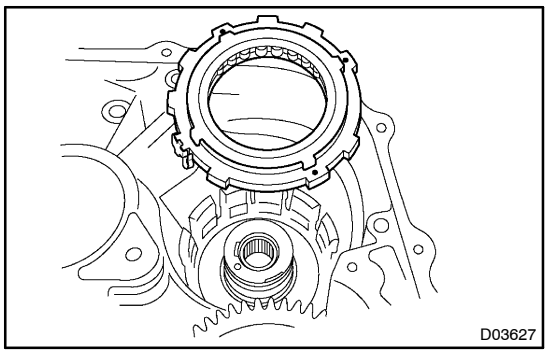

(b) Remove the one–way clutch No. 2 from the transaxle case.

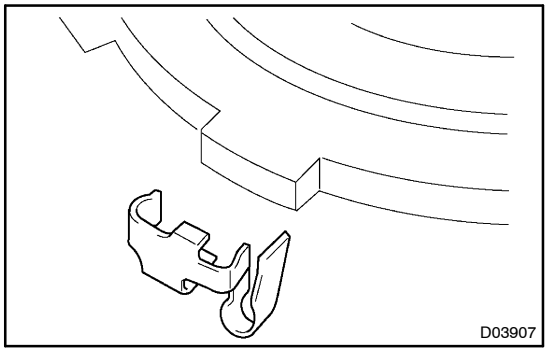

(c) Remove the outer race retainer from the one–way clutch No. 2.

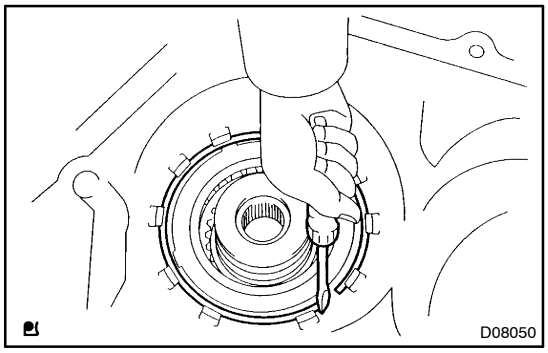

27. REMOVE U/D BRAKE

(a) Using a screwdriver, remove the snap ring.

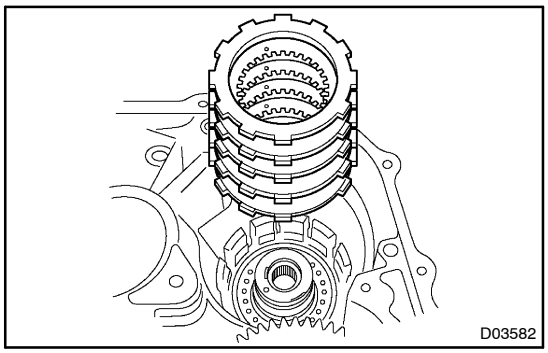

(b) Remove the flange, 4 discs and 4 plates from the transaxle case.

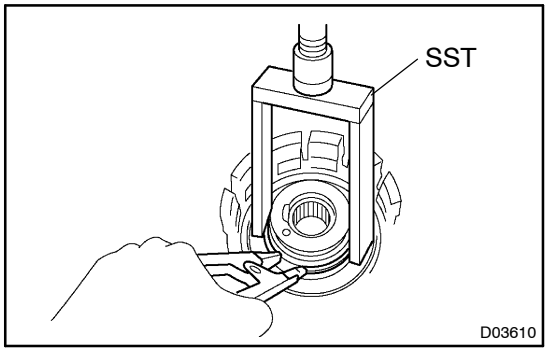

(c) Using SST, a snap ring expander and a press, remove the snap ring.
SST 09387–00020

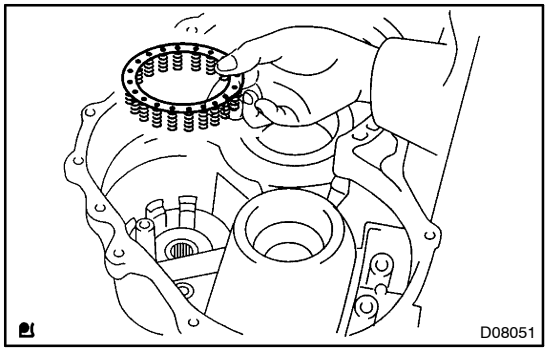

(d) Remove the piston return spring.

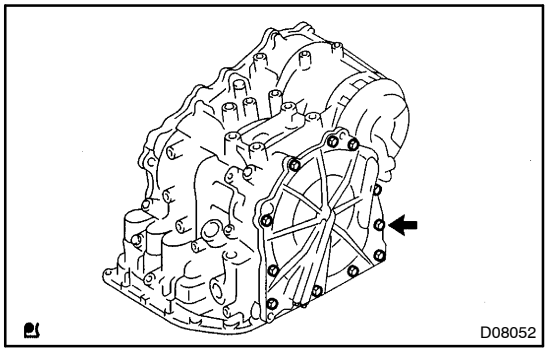

28. REMOVE TRANSAXLE REAR COVER

(a) Remove the 11 bolts.

(b) Tap on the circumference of the rear cover with a plastic hammer to remove the transaxle rear cover from the transaxle case.

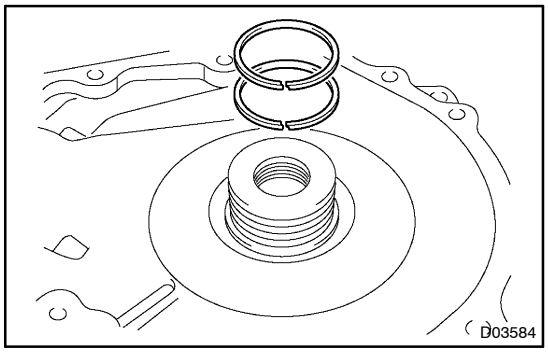

(c) Remove the 2 oil seal rings from the transaxle rear cover.

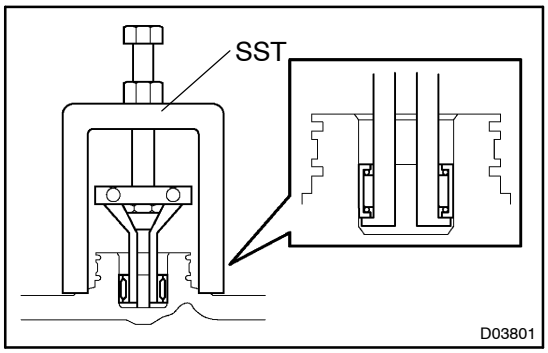

(d) Using SST, remove the needle–roller bearing.
SST 09387–00040 (09387–01010, 09387–01030, 09387–01040)

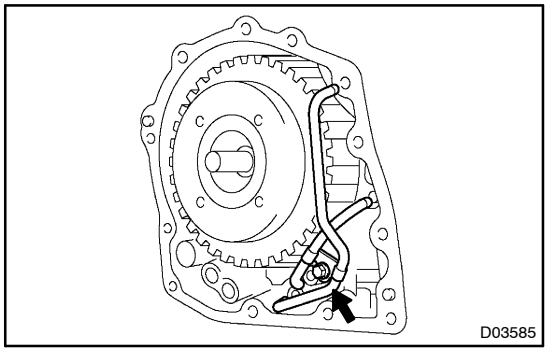

29. REMOVE BRAKE APPLY PIPE

(a) Remove a bolt, clamp and 2 brake apply pipes.

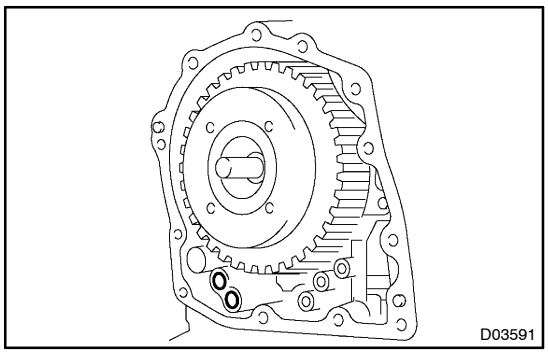

30. REMOVE TRANSAXLE CASE APPLY GASKET

Using a screwdriver, remove the 2 apply gaskets.

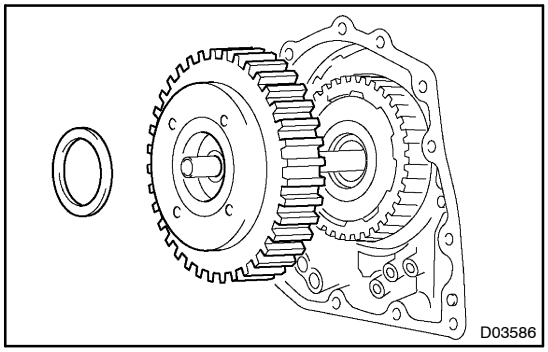

31. REMOVE DIRECT CLUTCH ASSEMBLY

(a) Remove the thrust bearing and the direct clutch from the transaxle case.

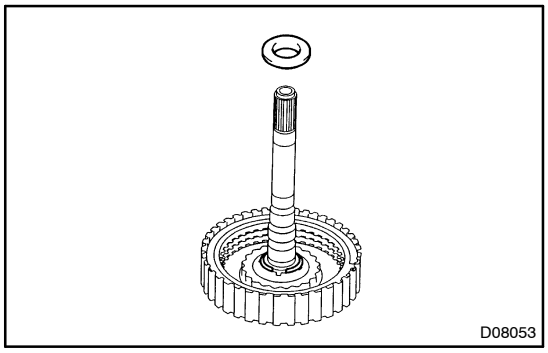

(b) Remove the bearing race from the direct clutch.

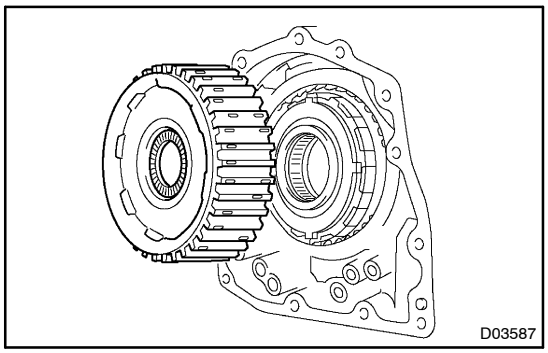

32. REMOVE REAR PLANETARY SUN GEAR ASSEMBLY

(a) Remove the rear planetary sun gear assembly from the transaxle case.

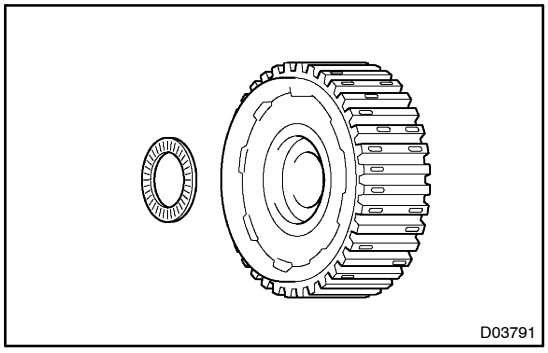

(b) Remove the thrust bearing from the rear planetary sun gear.

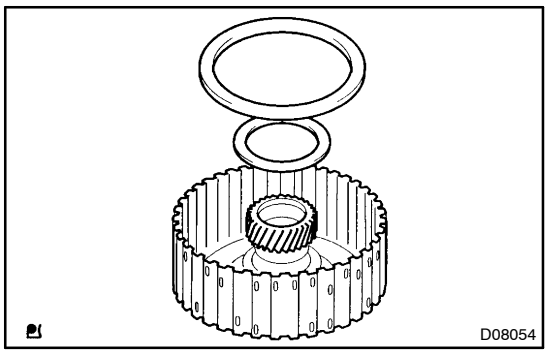

(c) Remove the thrust washer No. 1 and thrust bearing from the rear planetary sun gear.

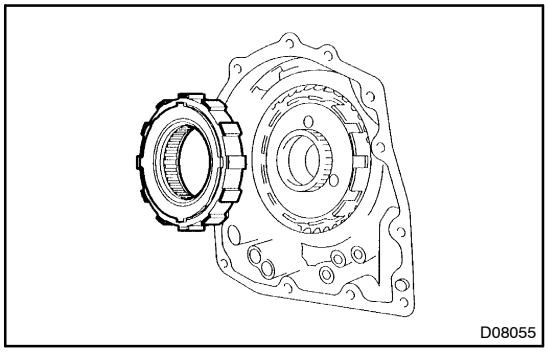

33. REMOVE ONE–WAY CLUTCH NO.1

(a) Remove the one–way clutch No.1 from the transaxle case.

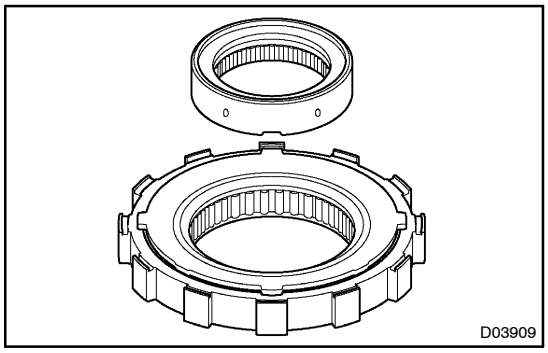

(b) Remove the inner race from the one–way clutch No.1.

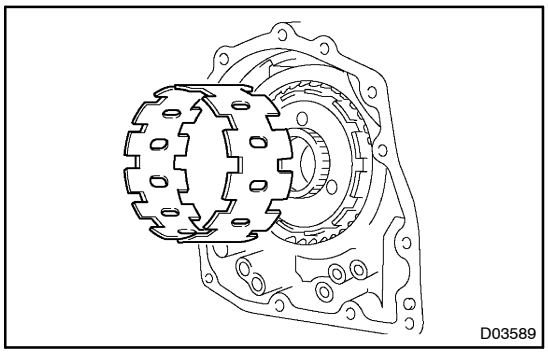

34. REMOVE ONE–WAY CLUTCH OUTER SLEEVE

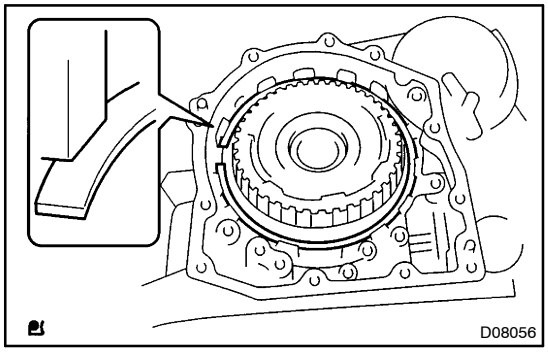

35. REMOVE 2ND BRAKE

(a) Using a screwdriver, remove the snap ring.

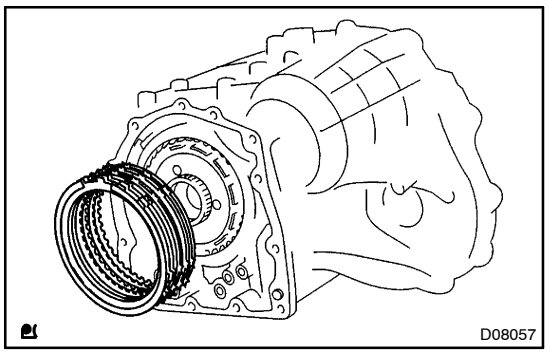

(b) Remove the flange, 4 discs and 4 plates from the transaxle case.

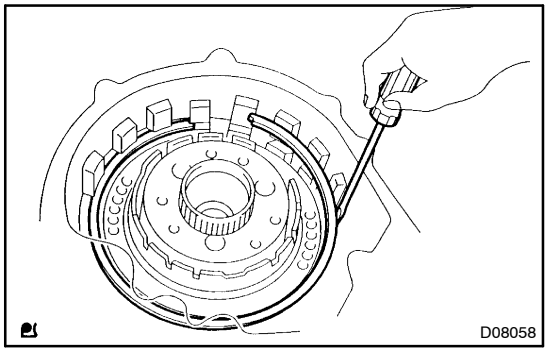

36. REMOVE 2ND BRAKE CYLINDER

(a) Using a screwdriver, remove the snap ring.

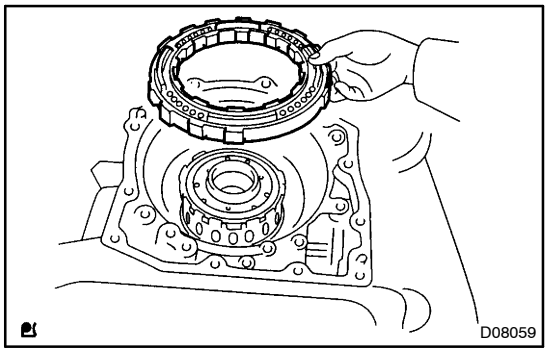

(b) Remove the 2nd brake cylinder from the transaxle.

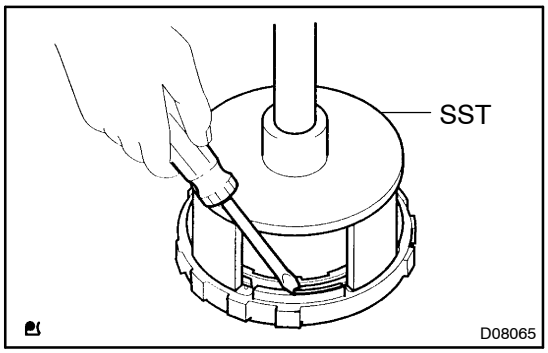

37. REMOVE 2ND BRAKE PISTON

(a) Using SST, a press and a screwdriver, remove the snap ring.
SST 09387–00060

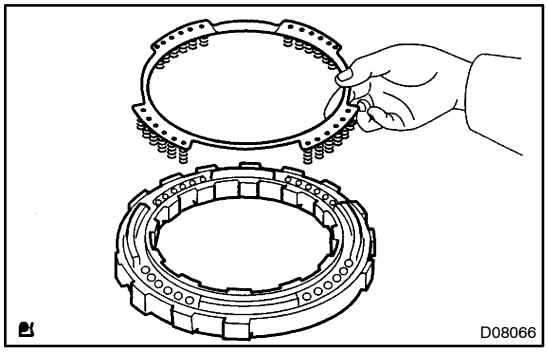

(b) Remove the return spring.

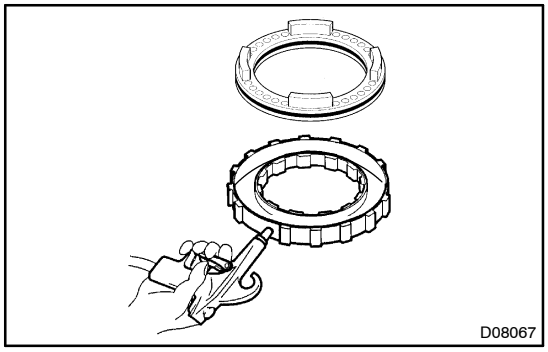

(c) Apply compressed air (392 kPa, 4.0 kgf/cm^2, 57 psi) to the 2nd brake cylinder to remove 2nd brake piston.

NOTICE:

- **Blowing off the air may cause the piston jump–out. When removing the piston, hold it with your hand using a waste cloth.**
- **Take care not to splash ATF when air–blowing.**

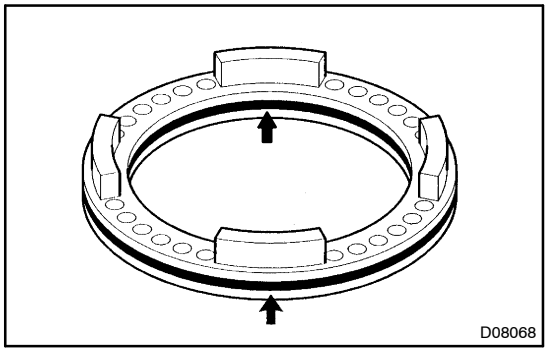

(d) Remove the 2 O–rings from the 2nd brake piston.

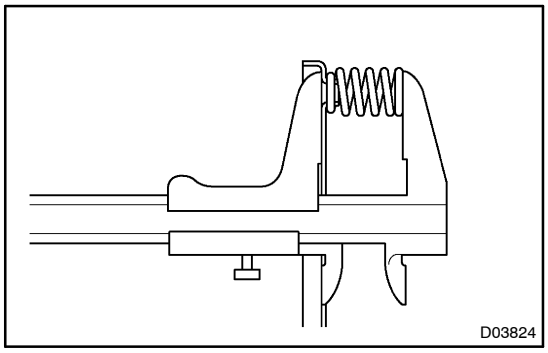

38. CHECK 2ND BRAKE PISTON RETURN SPRING

Using vernier calipers, measure the free length of the spring together with the spring seat.

Standard free length: 16.61 mm (0.6539 in.)

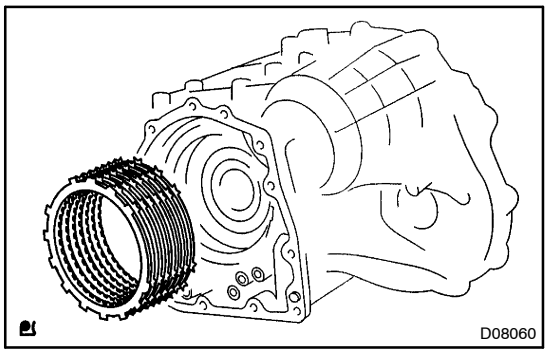

39. REMOVE 1ST & REVERSE BRAKE

(a) Remove the flange, 5 discs and 5 plates.

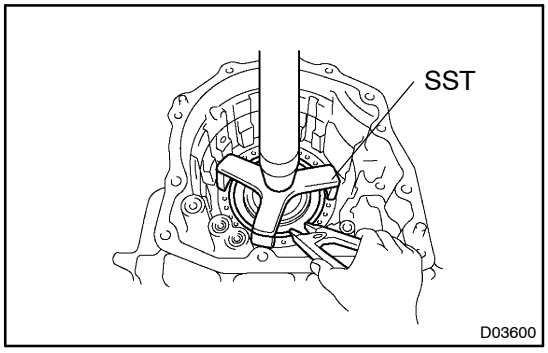

(b) Using SST, a press and a snap ring expander, remove the snap ring and the piston return spring.
SST 09387–00070

NOTICE:

- **Stop the press when the spring sheet is lowered 1 – 2 mm (0.039 – 0.078 in.) from the snap ring groove, preventing the spring sheet from deforming.**
- **Do not expand the snap ring excessively.**

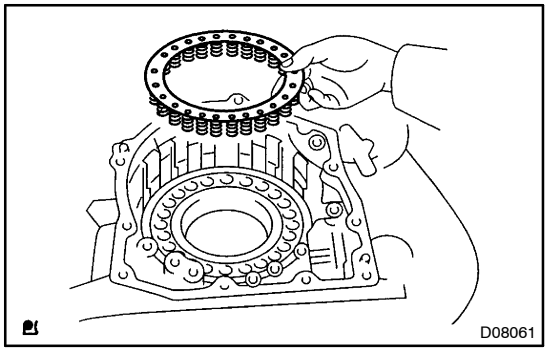

(c) Remove the return spring.

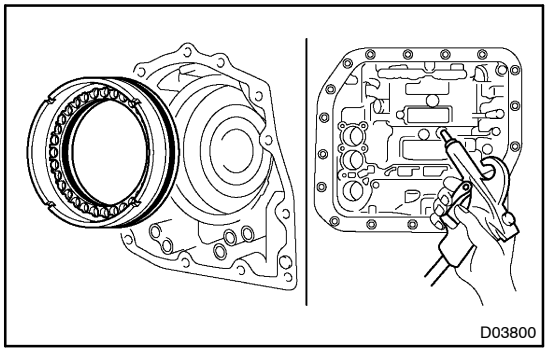

(d) Apply compressed air (392 kPa, 4.0 kgf/cm^2, 57 psi) to the transaxle case to remove 1st & reverse brake piston.

NOTICE:

- **Blowing off the air may cause the piston jump–out. When removing the piston, hold it with your hand using a waste cloth.**
- **Take care not to splash ATF when air blowing.**

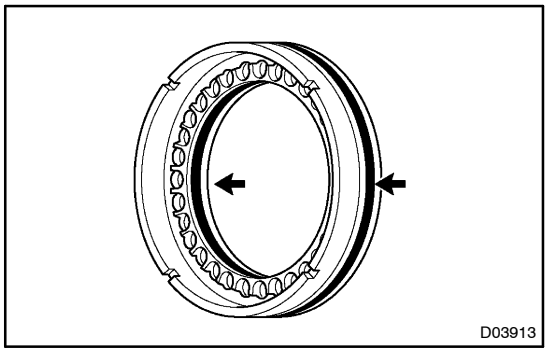

(e) Remove 2 O–rings from the 1st & reverse brake piston.

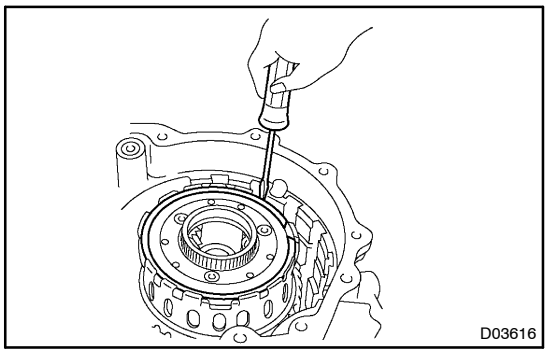

40. REMOVE REAR PLANETARY GEAR

(a) Using a screwdriver, remove the snap ring.

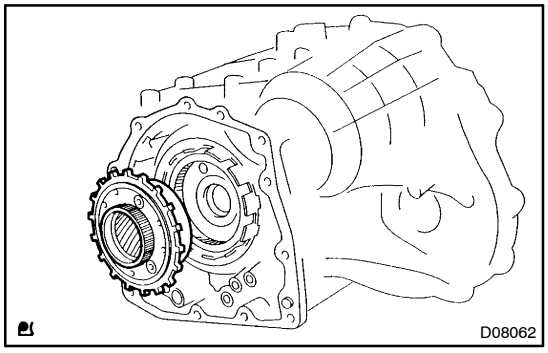

(b) Remove the rear planetary gear from the transaxle case.

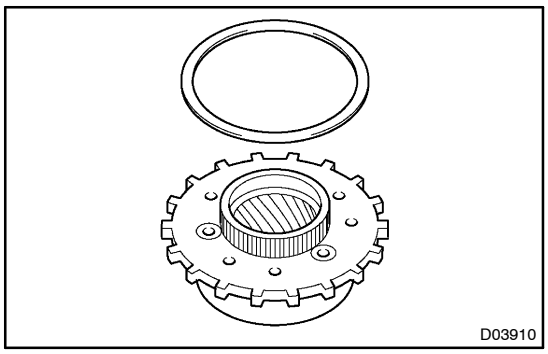

(c) Remove the thrust washer No. 2 from the rear planetary gear.

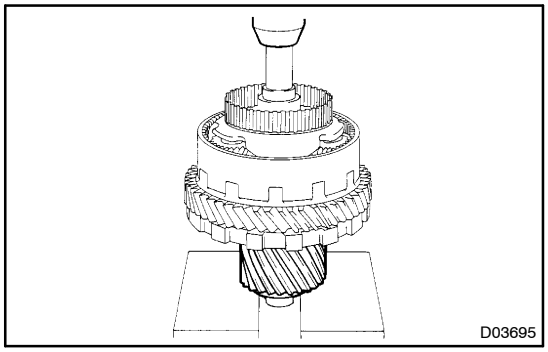

(d) Remove the bearing race from the rear planetary gear.

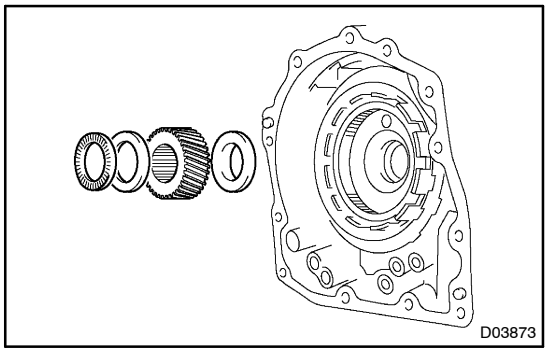

41. REMOVE FRONT PLANETARY SUN GEAR

(a) Remove the 2 thrust bearings, the bearing race and the front planetary sun gear from the transaxle case.

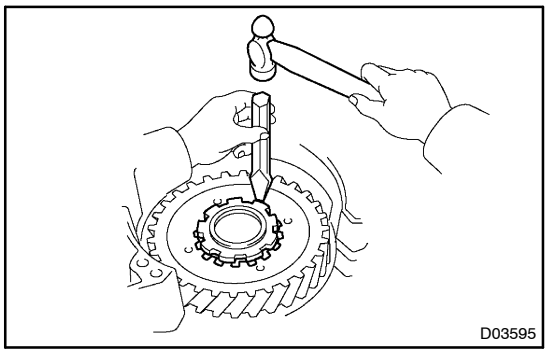

42. REMOVE FRONT PLANETARY GEAR ASSEMBLY AND BRAKE HUB

(a) Using a chisel and a hammer, unstake the lock washer.

NOTICE:

Push down all claws of the washer. Otherwise SST can not be fully pressed again the nut and can not loosen the nut.

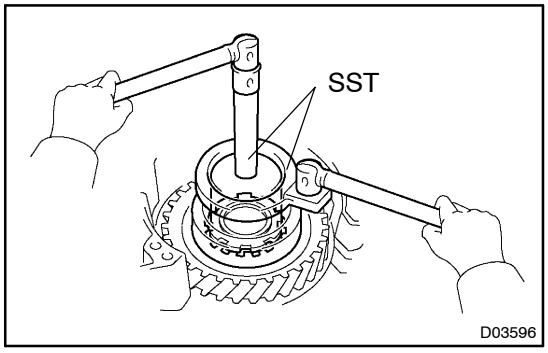

(b) Using SST, remove the nut.
SST 09387–00030, 09387–00080

(c) Remove the lock washer.

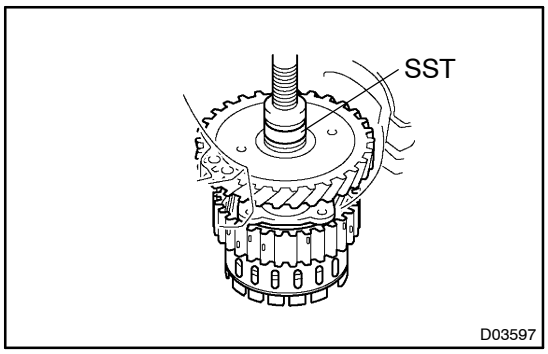

(d) Using SST and a press, remove the front planetary gear assembly from the counter drive gear.
SST 09950–60010 (09951–00450)

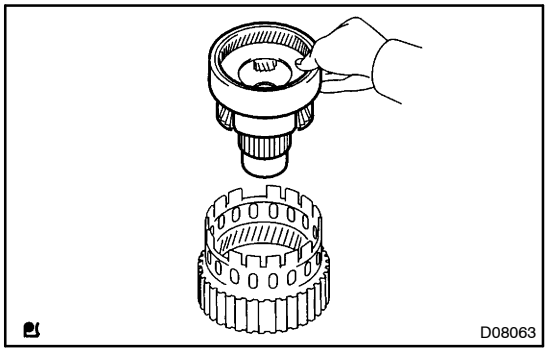

(e) Remove the front planetary gear.

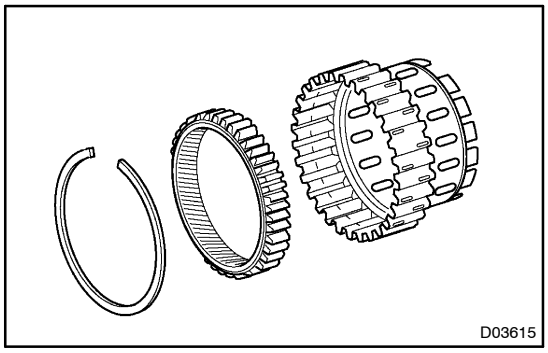

(f) Using a screwdriver, remove the snap ring.
(g) Remove the front planetary ring gear from the brake hub.

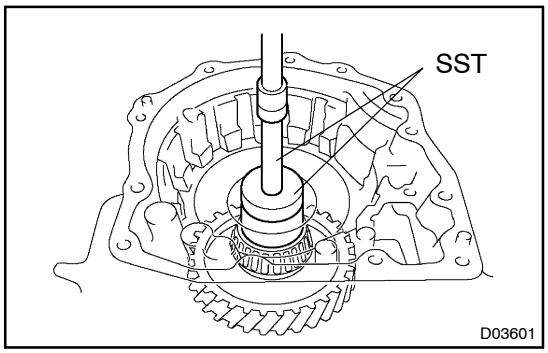

43. REMOVE COUNTER DRIVE GEAR

(a) Using SST and a press, remove the counter drive gear from the transaxle case.
SST 09950–60010 (09951–00600), 09950–70010 (09951–07100)

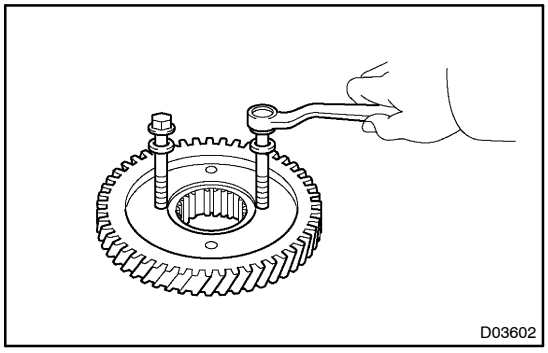

(b) As shown in the illustration, tighten 2 bolts evenly and make clearance of approx. 20.0 mm (0.797 in.) between the counter drive gear and the inner race.

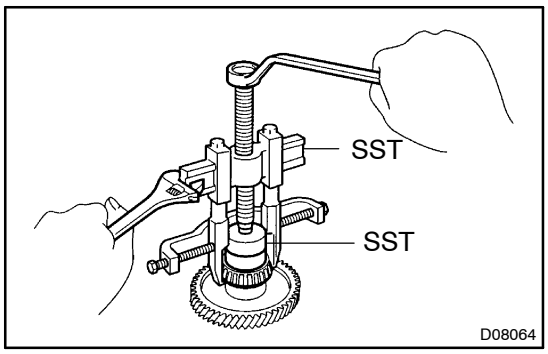

(c) Using SST, remove the tapered roller bearing RH.
SST 09950–40011 (09951–04010, 09952–04010, 09953–04020, 09954–04010, 09955–04011, 09958–04011), 09950–60010 (09951–00600)

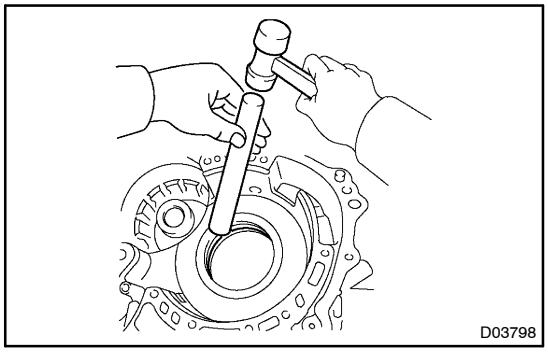

(d) Using a brass bar and a hammer, remove the 2 bearing outer races.

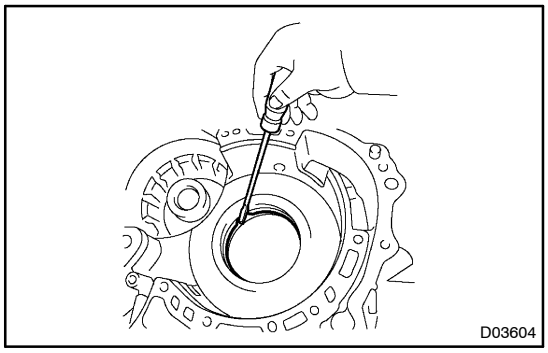

(e) Using a screwdriver, remove the snap ring from the transaxle case.

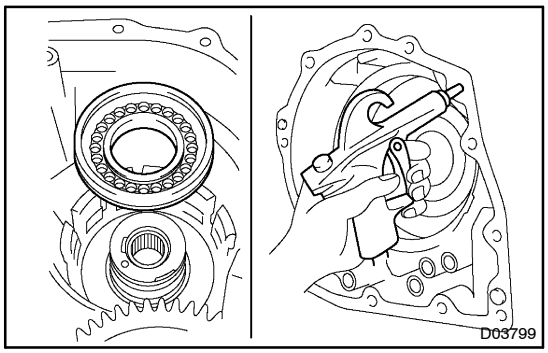

44. REMOVE U/D BRAKE PISTON

(a) Apply compressed air (392 kPa, 4.0 kgf/cm^2, 57 psi) to the transaxle case to remove the U/D brake piston.

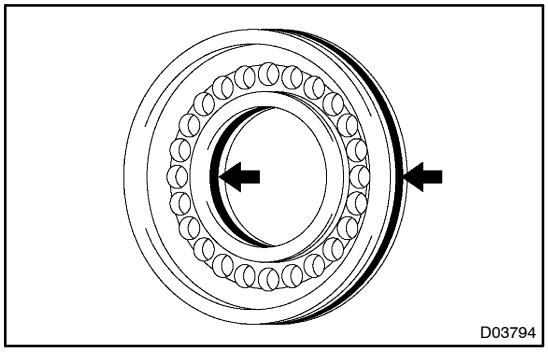

(b) Remove the 2 O–rings from the U/D brake piston.

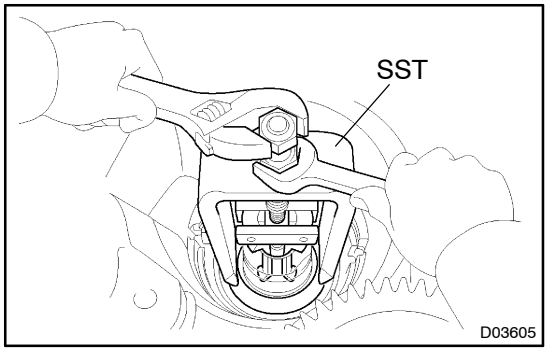

(c) Using SST, remove the needle–roller bearing from the transaxle case.

SST 09387–00040, (09387–01020, 09387–01030, 09387–01040)

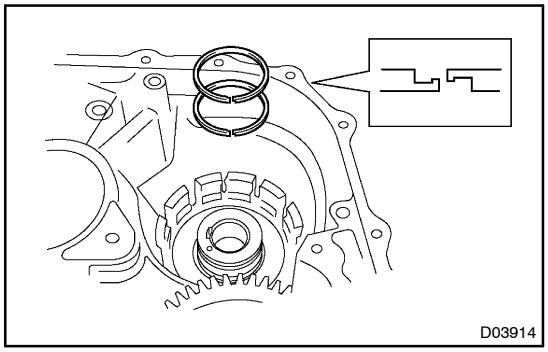

(d) Remove the 2 oil seal rings from the transaxle case.

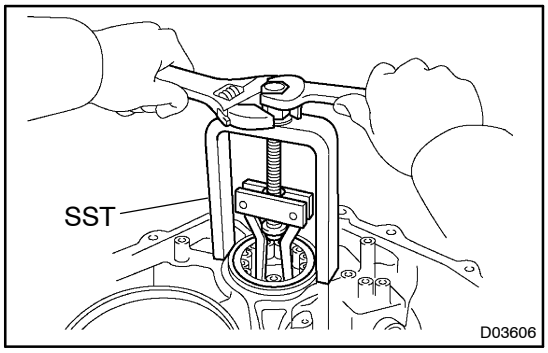

45. REMOVE U/D CYLINDRICAL ROLLER BEARING

(a) Using SST, remove the cylindrical roller bearing from the transaxle case.
SST 09514–35011

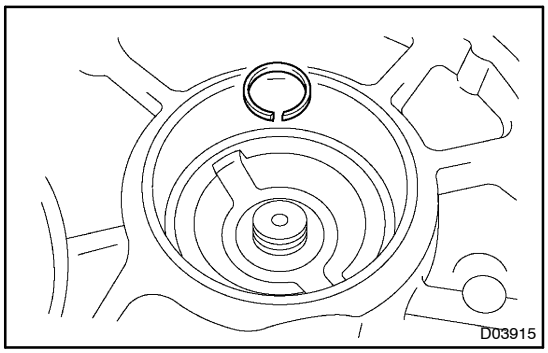

(b) Remove the oil seal ring from the transaxle housing.

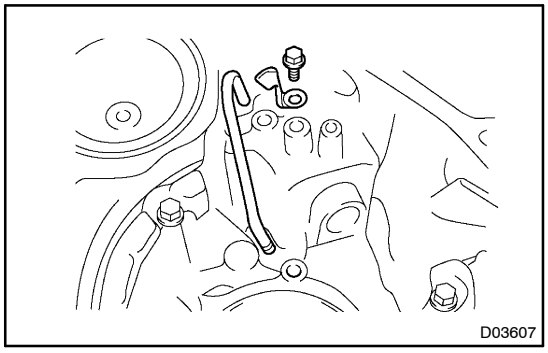

46. REMOVE APPLY PIPE

Remove the bolt, the clamp and the apply pipe from the transaxle case.

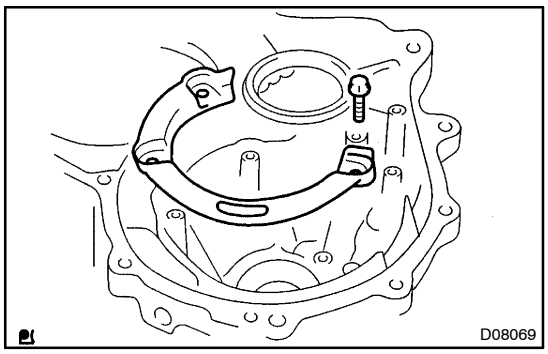

47. REMOVE OIL SEPARATOR

(a) Remove the 3 bolts and oil separator from the transaxle case.